Technical drawing (mm)
SMS Slim Fixed 400x200

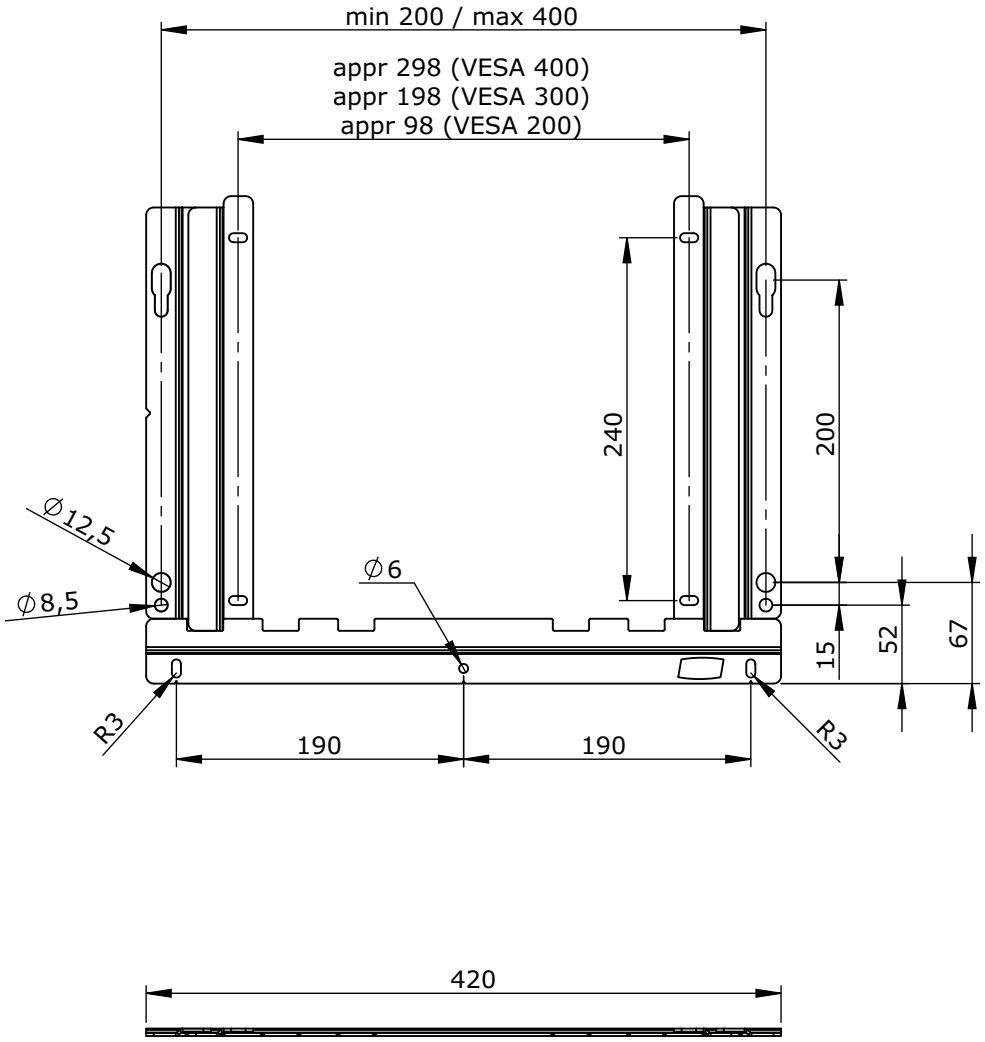

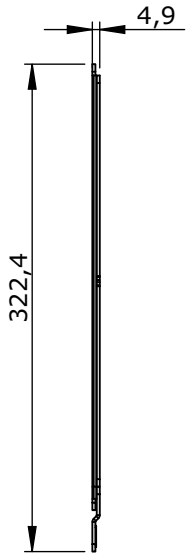

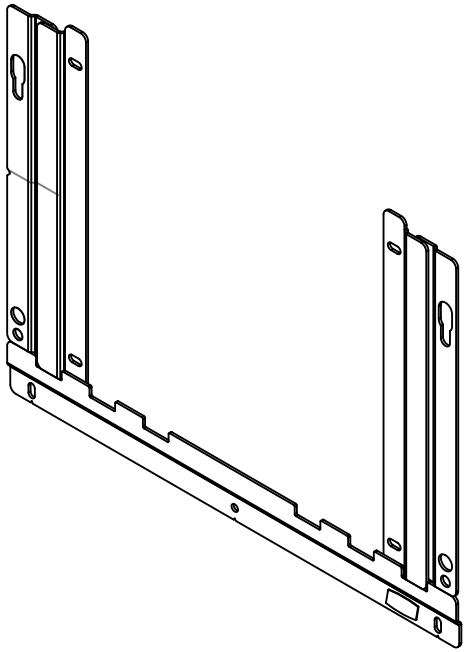

SMART MEDIA SOLUTIONS

Technical drawing (mm)
SMS Slim Fixed 400x400

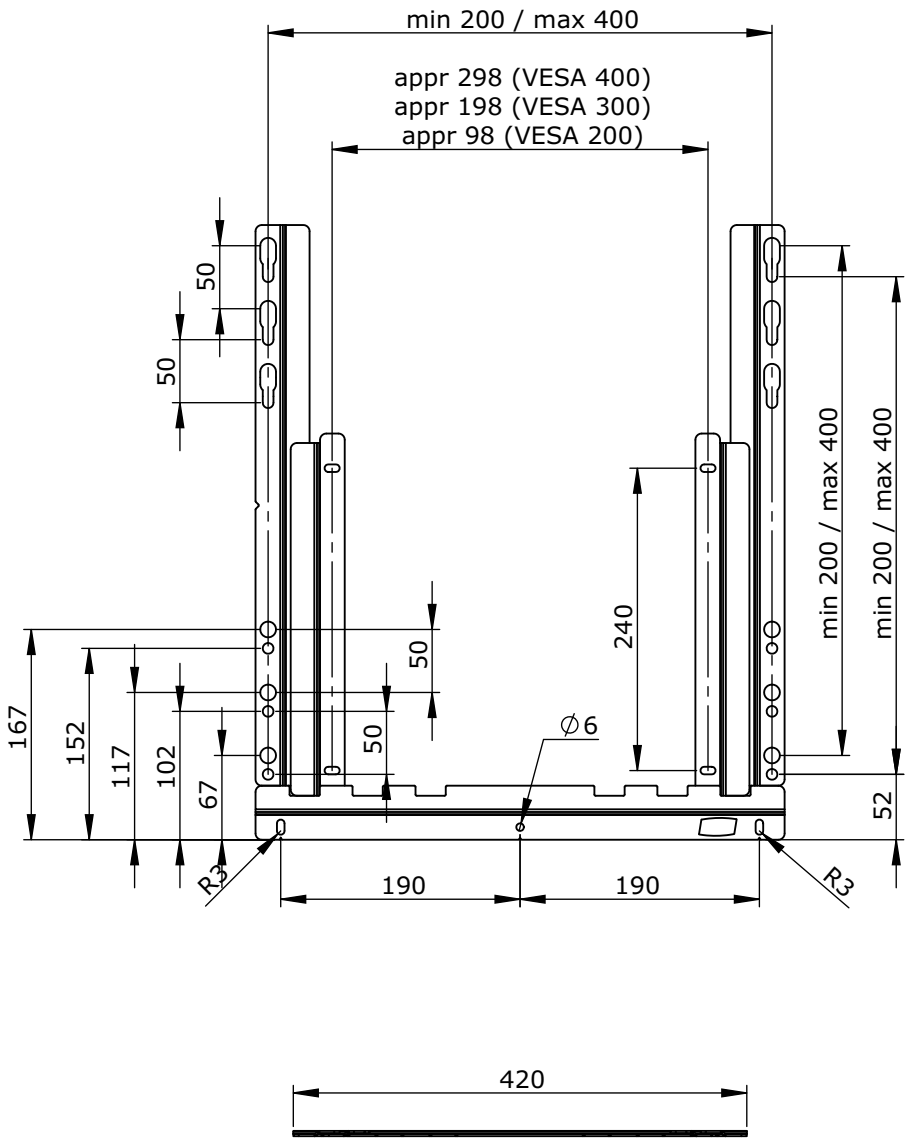

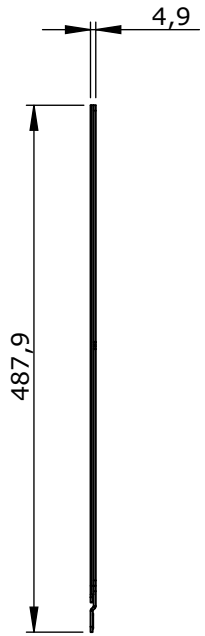

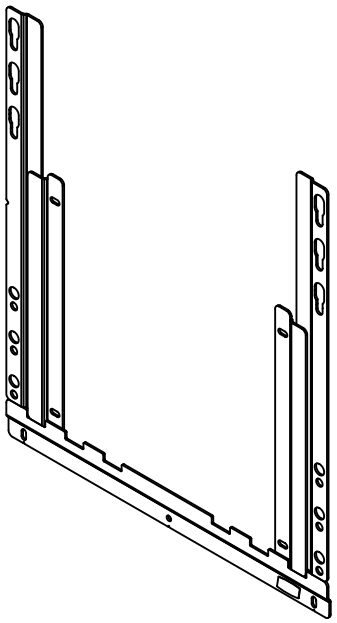

SMART MEDIA SOLUTIONS
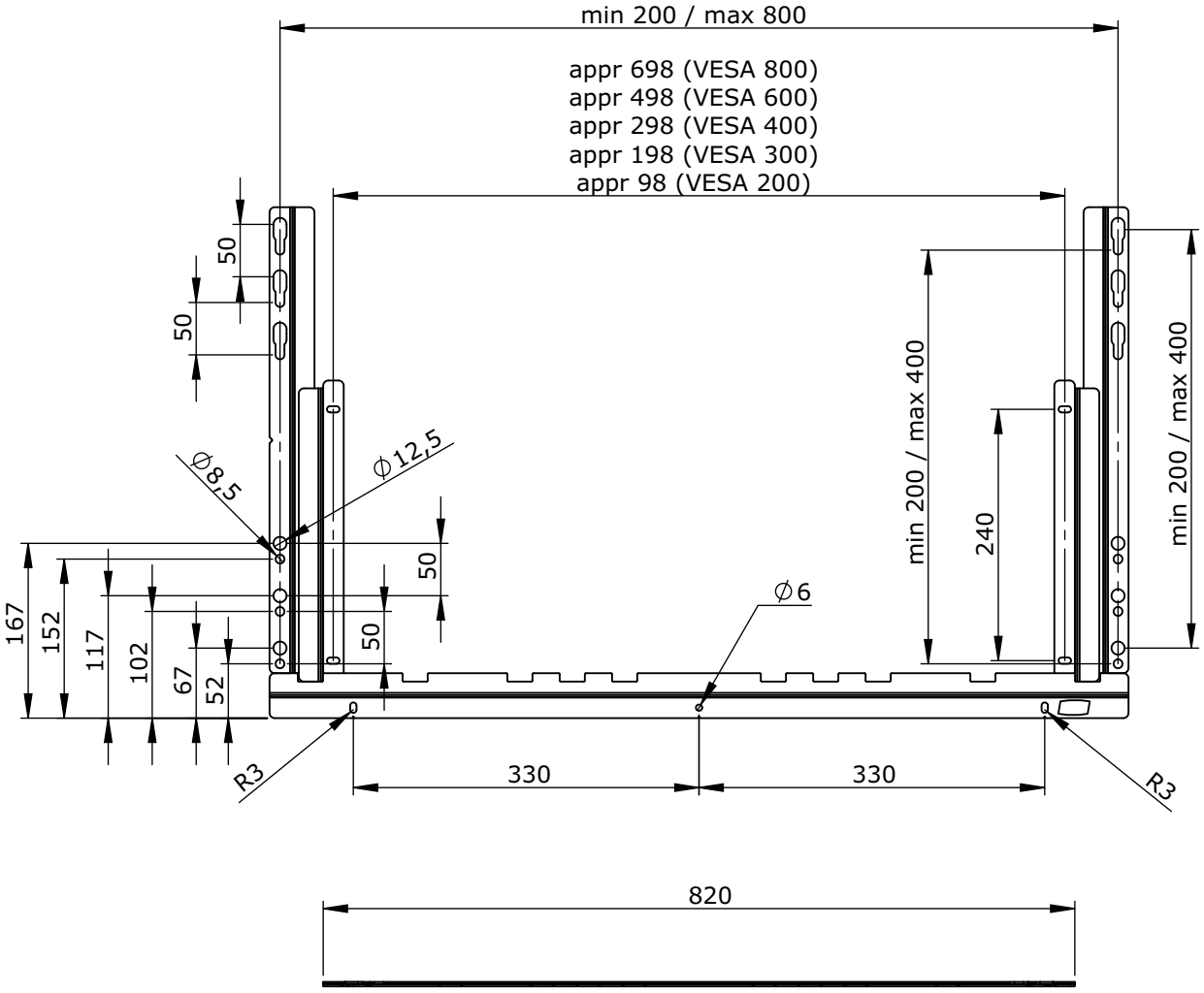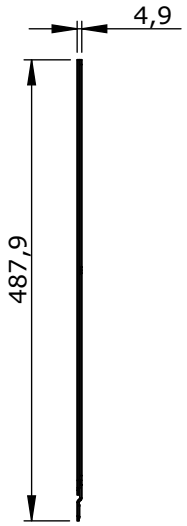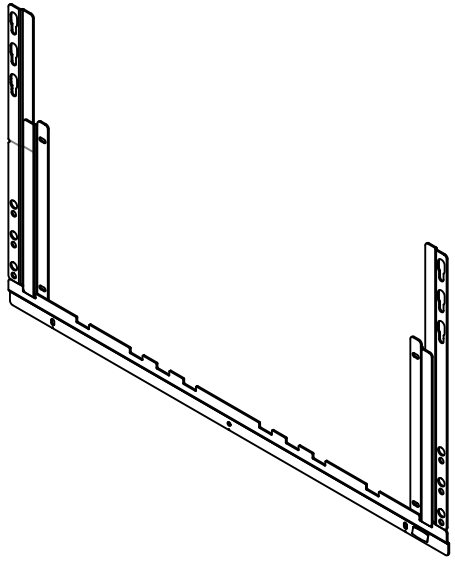
Technical drawing (mm)
SMS Slim Fixed 800x400